ACCULINK®

3160/3164

DATA SERVICE UNIT/ CHANNEL SERVICE UNIT

BENEFITS

- MULTIPLE MANAGEMENT METHODS (ASCII, TELNET, IN-BAND, OUT-OF-BAND) OFFERS FLEXIBILITY TO MATCH INSTALLATION AND APPLICATION REQUIREMENTS
- SOFTWARE-DOWNLOADABLE ARCHITECTURE PROVIDES FAST AND EASY PRODUCT ENHANCEMENTS TO MEET EVOLVING CUSTOMER APPLICATIONS
- REMOTE OPERATION THROUGH AN INTEGRAL V.22bis MODEM ENHANCES SERVICEABILITY AND IMPROVES UPTIME
- INTEGRAL ACCULINK 3150 D4/ESF CSU ENSURES OPTIMUM PERFORMANCE AND IN-SERVICE DIAGNOSTICS
- OFFERS MAXIMUM CONFIGURATION FLEXIBILITY (ANY-DS0-TO-ANY-PORT, SYNCHRONOUS OR DSX-1)
- MENU-DRIVEN, FRONT PANEL LCD ENSURES EASY SETUP AND TESTING
- ACHIEVES RAPID DETERMINATION OF APPLICATION STATUS THROUGH ENGLISH LANGUAGE ALARMS

Paradyne's ACCULINK® 3160 and 3164 Data Service Unit/Channel Service Units (DSU/CSUs) are the ideal solution for cost-effective, high-speed access to LAN/WAN applications.

Flexible and economical, the ACCULINK 3160 and 3164 connect to T1 and FT1 network services from fractional Nx56/64 Kbps speeds up to 1.544 Mbps. They deliver affordable access to the high-bandwidth requirements of LAN internetworking, video conferencing, CAD/CAM, and image applications in one- to four-port configurations. The ACCULINK 3160 and 3164 access public network services and private backbone networks. These units support Facility Data Link (FDL) and Embedded Data Link (EDL) for Non-Disruptive In-band SNMP management of T1 and FT1 circuits and can also provide SNMP management over Frame Relay with a connection from the 3160/3164 COM or AUX port to a remote router port or external LAN adapter.

Backed by our two-year, return to factory warranty, the ACCULINK 3160 and 3164 DSU/CSUs meet your network access needs with the maximum in high-speed access, flexibility and performance.

For high-speed access coupled with flexibility and control, the ACCULINK 3160 and 3164 can be configured for point-to-point or point-to-multipoint, using Fractional T1 topologies. It also provides any-DS0-to-any-port (synchronous or DSX-1) configuration flexibility; a menu-driven, front panel LCD control for simplified setup, diagnostics and management; and an integral V.22bis modem for remote operation.

The software-downloadable architecture of the two-port ACCULINK 3160 or four-port ACCULINK 3164 allows fast and easy updates and enhancements to functionality. The standard DSX-1 drop and insert port allows you to integrate your voice and data networks, saving money while improving data application performance.

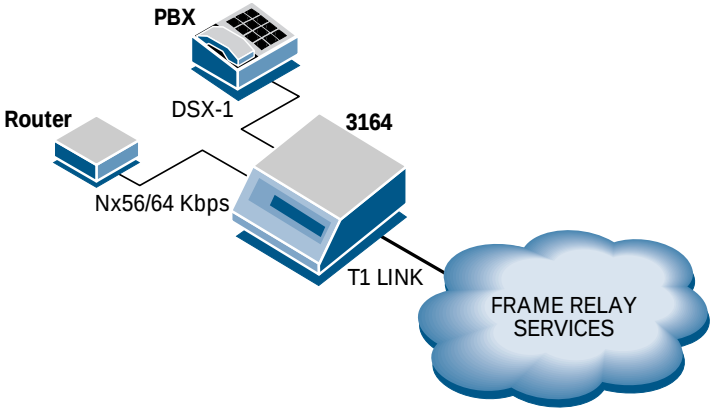

PARADYNE™

FEATURES

- DIRECT SNMP MANAGEMENT
- INDEPENDENTLY CONFIGURABLE Nx56/64 Kbps PORTS
- DSX-1 DROP AND INSERT PORT
- ENHANCED ASCII (VT-100) USER INTERFACE
- TELNET
- 2x16 LCD DISPLAY FOR CONFIGURATION AND STATUS
- REMOTE OPERATION AND AUTOMATIC DIAL-OUT ALARM CONDITION THROUGH INTEGRAL V.22bis MODEM
- MULTIPLE POWER SOURCE OPTIONS
- INTEGRAL BERT: QRSS, 511 AND 1 IN 8
- SIX DIFFERENT LOOPBACKS (SUPPORTS V.54 LOOPBACKS, TYPE 2 AND 3)
- THREE SETS OF BANTAM TEST JACKS
- OPTIONAL WINDOWS-BASED, FRONT PANEL EMULATION SOFTWARE

The ACCULINK 3160 Series also includes a variety of choices for controlling the configuration, diagnostics and management of each unit through a menu-driven front panel LCD, or by a PC (running ACCULINK 3100 Series front panel emulation software under Windows 3.1 or greater) attached to the rear communications port.

For remote management, the local front panel or the PC using the integral V.22bis modem provides access for controlling the remote front panel functions.

Ports and Connectors

The 3160 DSU/CSU offers two data ports, and the 3164 DSU/CSU offers four data ports on EIA-530 interfaces (optional V.35 and RS-422/449 cables available). Both units provide a DSX-1 port which can be used for drop and insert to support voice channels to a digital PBX. The 3160 and 3164 supply a COM port for connection to a PC for front panel emulation software, access to the user-friendly ASCII interface for local configuration and management, or connection to a router port or external LAN adapter for connection to an SNMP management system. The AUX port is supplied for connection to an external LAN adapter for SNMP or Telnet, or for daisy chaining multiple 316X DSU/CSUs to an external LAN adapter. A DB-15 connector is provided for external clocking, allowing for optimum network synchronization. Both units supply a modular RJ-11 connector for connecting a phone line to the internal modem.

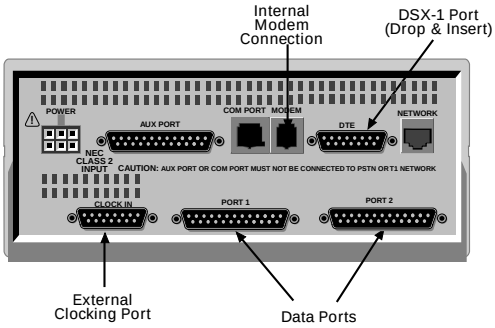

3160 DSU/CSU Rear Panel

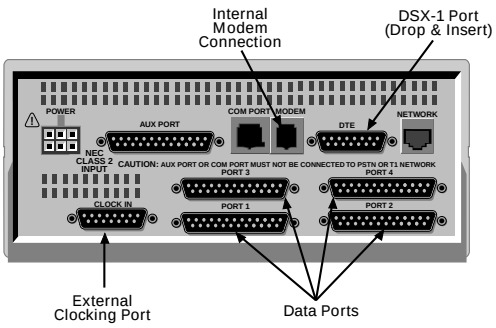

3164 DSU/CSU Rear Panel

316X SPECIFICATIONS

DTE Interfaces
Synchronous Ports: Selectable V.35, RS-449/V.11, EIA-530A
DSX-1: D4 or ESF, AMI or B8ZS, Equalization: 5 ranges (0-655‘, 0-196.5m)

Network Interface
Format: D4, ESF
Line Code: AMI, B8ZS
Line Build Out: 0.0 dB, -7.5 dB, -15 dB, -22 dB
ANSI PRMS: Selectable

Clocking
Internal: 1.544 MHz ± 32 PPM (50Hz @ 1.544 MHz)
Sources: Network TI, DSX-1, DTE, Clock-in
Clock-In: RS-422 or RS-423, Rates: 2.048 MHz, 1.544 MHz, 8 KHz (±32 PPM accuracy)

MTBF >15 years

Diagnostics
Loopbacks: V.54 (Type 2, 3), AT&T 54016, 62411, ANSI TI.403-1989, DTE, Repeater
Test Pattern: QRSS, 1 in 8, 511 (Real-time monitored)

Standards
FCC: Part 68, Part 15 Class A
UL: UL1950
CSA: CSA-22.2 Number 950-M89, CSA 108.8-M1983
AT&T TR: 54016, 62411, 54019A (ACAMI Clear Channel)
ANSI TI.403

Power	3164 4-Port (Watts/BTU/hr)	3160 2-Port (Watts/BTU/hr)
115 VAC (104-132, 57-63 Hz)	16/55	12/55
+24 VDC (20 to 32, VDC)	12/41	8.5/29
-48 VDC (-38 to -60, VDC)	12/41	8.5/29
Weight	3.7 lbs. (1.7 kg)	3.5 lbs. (1.6 kg)

For additional information on this or any Paradyne product or service, contact the office nearest you. Or, dial toll-free (USA and Canada) 800 482-3333 or call 813 530-8623. Fax (USA) 813 530-2103.

Toronto 905 709-5000 fax: 905 709-3469
Europe 44-1-753-515000 fax: 44-1-753-550011
Hong Kong 852 2543-0083 fax: 852 2541-3767
Singapore 65 355-5230 fax: 65 355-5244
Montreal 514 288-0001 fax: 514 288-1246
Japan 81 3-5541-6630 fax: 81 3-5541-6631
Latin America 813 530-8358 fax: 813 532-5240
Visit the Paradyne Power Pages at **http://www.paradyne.com**

Specifications subject to change without notice. Printed in U.S.A. ©Paradyne Corporation 1997.

ACCULINK is a registered trademark of Paradyne Corporation. PARADYNE is a trademark of Paradyne Corporation. All other products or services mentioned are the trademarks, service marks, registered trademarks, or registered service marks of their respective owners.

50% TOTAL RECOVERED FIBER 10% POST-CONSUMER FIBER

DSU-316X-5-0597

PARADYNE™