WANSUITE® 1110

HIGHLIGHTS

Compact, low-cost transcoding and transframing T1/FT1 ESF CSU

Automatic conversion from SF to ESF framing and line coding

Ease of installation with automatic line build out on network and equipment interface

All unframed ones during signal loss from DTE or T1 network

B8ZS or AMI formats

Performance report messages

DIP switch configurable

Test jacks

Desktop or wall mountable

COMPACT AND COST EFFECTIVE

Verilink's **WANsuite® 1110** builds on our market-proven CSU technology by providing T1 access in a compact, cost-effective device. The 1110 offers simple configuration, test capability and full-featured performance by providing signal regeneration, line conditioning and surge protection for T1 circuits — all in one small package.

TESTING

Verilink's WANsuite 1110 offers easy configuration and test capability via DIP switches. Network administrators can locate Data Terminal Equipment (DTE) where needed using the 1110's switch-selectable DSX-1 pre-equalizer. The 1110's network transmit path contains a switch-selectable, T1 facility pad for -22.5, -15, or 0 dB, which allows line build out for the incoming DTE signal and supports signals of +1 to -30 dB from the network.

With the WANsuite 1110, network administrators can test or monitor network transmission via three bantam jacks. Two bantam jacks are for interruptive loopbacks and testing toward the T1 network or the DTE while the third provides non-interruptive passive monitoring of transmitted data in either direction.

Additionally, Verilink's WANsuite 1110 extends cost efficiencies to network administrators requiring alternate mark inversion (AMI)-framed DTE devices to communicate over B8ZS framed-network circuits. The 1110 will automatically adapt line coding as needed to accommodate legacy networks. This feature allows network administrators the capability to use existing PBX equipment.

QUICK AND SIMPLE INSTALLATION

At Verilink, we understand that finding a solution for space limitation and high network costs, while at the same time requiring simple configuration, is an ongoing challenge. That's why Verilink's WANsuite 1110 is compact yet delivers cost-efficient, full-featured T1 access — in an easily configured device.

Go to www.verilink.com or call 866.665.1515 for more information

VERILINK®

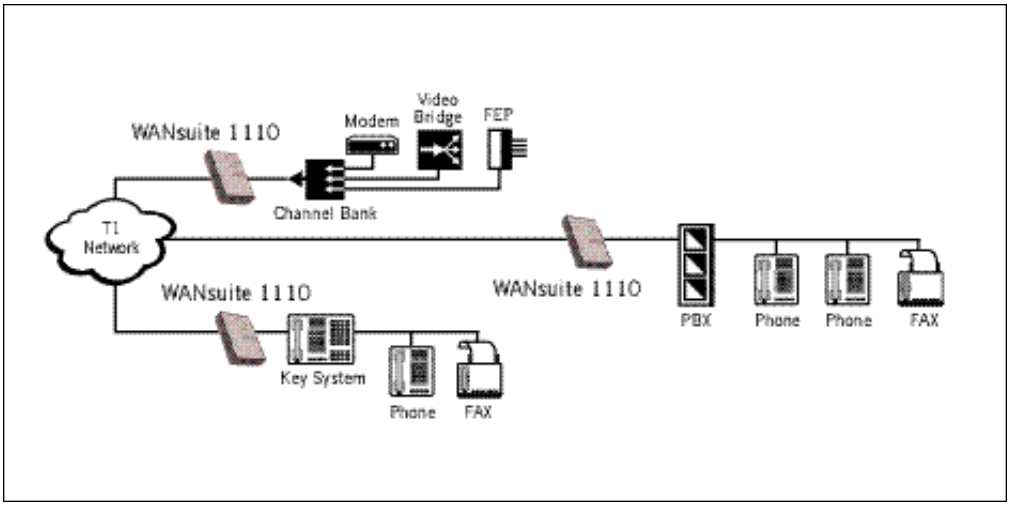

SPECIFICATIONS

PRICE GUIDE REFERENCE
1100022: WANsuite® 1110 Transcoding/transframing ESF CSU

NETWORK INTERFACE
Line Rate: 1.544 Mbps (±50 bps)
Line Code: AMI or B8ZS
Line Framing: D4 or ESF
Line Impedance Balanced: 100 ohms ±5%, RJ-48C
Input Signal: DS-1, +1 to -30 dB (ALBO)
Output Signal: 3.0 V, ±15%, base-to-peak into 100-ohm resistor
Line Build Out: 0, -7.5, -15 and -22.5 dB attenuation
Line Protection: 1000 V lightning protection, fused input/output
Keep Alive: Unframed all ones loss of DTE signal (DTE loopback)
Jitter Control: per TR 62411 and T1.403
Pulse Density: per TR 62411
Connection: RJ-48C

EQUIPMENT INTERFACE
Line Rate: 1.544 Mbps (±50 bps)
Line Code: AMI or B8ZS
Line Framing: D4 or ESF
Line Impedance Balanced: 100 ohms ±5%, RJ-48C
Input Signal: DSX-1 to 655 ft
Output Signal: Selectable DSX-1 signal level from 0 to 655 ft
Line Protection: 1000 V lightning protection, fused input/output
Keep Alive: Unframed/framed all ones loss of network signal (line or payload loopback)
Connection: RJ-48C

MANAGEMENT INTERFACE
Configuration: DIP switch
LED Indicators: Power, loopback, net loss, equipment loss

PERFORMANCE DATA
Performance Report Messages: ANSI T1.403
Maintenance Messages: AT&T TR 54016

STANDARDS AND REGULATORY COMPLIANCE
FCC: Part 15, Class A Subpart B, FCC Part 68
U.S. Safety: UL 1950, C - UL CSA C22.2 No. 950-95
Industrie Canada: CS-03, Issue 8
Bellcore: GR-1080-CORE

POWER REQUIREMENTS
External Transformer: 115 VAC input; 9 VAC, 750 mA output

SIZE
3.5 in. W, 5.7 in. D, 1.25 in. H

WARRANTY AND SUPPORT
Five-year warranty

DS-44-00261 (Rev.1 6.01)

©2001 Verilink Corporation. Verilink and the Verilink logo are registered trademarks of Verilink Corporation. Other brands or products mentioned may be trademarks or registered trademarks of their respective owners.

This document does not create any express or implied warranty about Verilink or about its products or services. Verilink's sole warranty is contained in its product warranty. The end-user documentation shipped with Verilink products constitutes the sole specifications referred to in the product warranty. Verilink has made reasonable efforts to verify that the information contained herein is accurate, but Verilink assumes no responsibility for its use or any infringement of patents or other rights of third parties that may result. The customer is solely responsible for verifying the suitability of Verilink's products for its use. Specifications are subject to change without notice.

VERILINK CORPORATION 950 Explorer Blvd. Huntsville, AL 35806 866.665.1515 256.327.2001 www.verilink.com